# Mechanical temperature switches

# Type MT1H

with capillary

## Features

- Single switch with remote sensor
- Explosion proof housing
- Terminal clip and set point adjustment in °C and °F under tamper protected cover
- Protection class: IP65, NEMA 4 / 13
- Optional:
- Disconnection with manual reset, G (RD)-micro switch
- Adjustable hysteresis (dead band), S-micro switch
- Approvals: Ex ia, UL, CSA

## Adjustment ranges

-45 °C...+66 °C to +160 °C...+316 °C

## Applications

Temperature monitoring in machine and machine tool industry, shipbuilding, railcars, power plants, antifreeze, heating systems, compressor monitoring

## Technical Data

| | |
|---|---|
| **Housing material:** | Die-cast aluminium, anodized |
| **Temperature sensor material:** | 304 stainless steel (1.4301) |
| **Temperature sensor type:** | Capillary, 1.8 m long (6 foot) (optional 3.6 m and 7,5 m) (12 foot and 25 foot), armoured<br>If not equipped with thermowell the sensor may only be used up to 21 bar max. |
| **Electrical values:** | All models are equipped with SPDT contacts |
| **Micro switch type:** | H, M, GH, GM, G (RD), S |
| **Electrical connection:** | 1/2" NPT female, internal screw terminal, cable gland in PA, for cable size 6...12 mm is included |

| | |
|---|---|
| **Protection class:** | IP65 , NEMA 4 / 13 |
| **Set point adjustment:** | Turn adjustment knob clockwise to increase the actuation point |
| **Standards:** | The equipment is in conformity with the following harmonised European standards:<br>EN 60014 1977 + A1 to A4 and EN 500120 1977 + A1 |
| **Intrinsic safety:** | The switches are also suitable for intrinsically safe applications. Add "Exi" in case of ordering. The following max. values are valid when using these switches:<br>Umax = 28 V Imax = 50 mA |
| **Approvals:** | Ex ia, UL, CSA |
| **Weight:** | 1.0 kg approx. |

## Adjustment ranges

| Code adjustment range | Sensor temperature limits (°C) | Adjustment range (°C) | Hysteresis (°C)* for micro switch | | | |
|---|---|---|---|---|---|---|
| | | | H, GH | M, GM | S | G (RD) |
| | | | | | | 2.8...manual |
| 154 | -73 … +93 | -45... +66 | 0.5... 1.1 | 1.1... 2.2 | 2.2... 8.3 | |
| 251 | -73 … +149 | +10... +121 | 0.5... 1.1 | 1.1... 2.2 | 2.2... 8.3 | |
| 351 | -73 … +205 | +66... +177 | 0.5... 1.1 | 1.1... 2.2 | 2.2... 8.3 | |
| 601 | -18 … +343 | +149... +227 | 1.1... 2.2 | 2.2... 3.3 | 3.9... 13.9 | |
| 603 | -18 … +343 | +160..+316 | 1.1... 2.2 | 2.2... 3.3 | 3.9... 13.9 | |

* Dependent on medium

# Mechanical temperature switches

**Type MT1H**

## Dimensions (mm / *inch*)

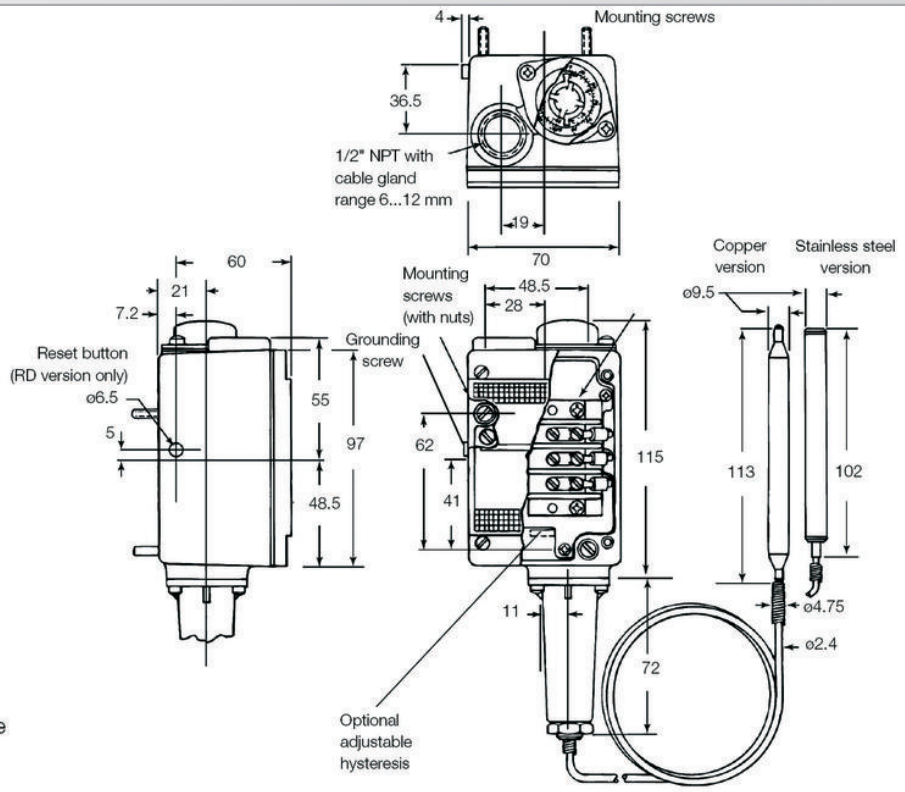


**Contacts: color code and function**

| | | |
|---|---|---|
| C | = Common | = purple |
| NC | = Normally Closed Contact | = blue |
| NO | = Normally Open Contact | = red |

## Electrical Ratings

| Micro switch | Special features | Volt AC 50/60 Hz | Ind. load A | Res. load A | Volt DC | Ind. load A | Res. load A | Comments |
|---|---|---|---|---|---|---|---|---|
| H | Micro switch with silver contacts | 125<br>250<br>480 | 10<br>10<br>3 | 10<br>10<br>3 | 6<br>to<br>28 | 0.50 | 0.5 | Small hysteresis;<br>High AC /<br>low DC loads |
| M | Micro switch with silver contacts | 125<br>250<br>480 | 10<br>10<br>3 | 10<br>10<br>3 | 12<br>24<br>250 | 5.00<br>1.00<br>0.25 | 15.0<br>2.0<br>0.4 | Medium hysteresis;<br>High AC and<br>DC loads |
| GH | Micro switch with gold contacts for low voltage and low current | 125 | 1 | 1 | 24 | 1.00 | 1.00 | Small hysteresis |
| GM | | 30 | 0.1 | 0.1 | 30 | 0.10 | 0.1 | Medium hysteresis |
| S | Micro switch with silver contacts | 480 | 15 | 15 | 125 | 0.05 | 0.4 | Adjustable hysteresis |
| G (RD) | Micro switch with silver contacts | 480 | 10 | 10 | 125 | 0.4 | 0.75 | Manual reset |

Hermetically sealed micro switch (HMT1H) on request

## Sensor lengths / Options

| Sensor lengths | | Options | |
|---|---|---|---|
| S-A | 1.8 m, armoured, SS (6 foot) | RD | Manual reset |
| S-12-A | 3.6 m, armoured, SS (12 foot) | EXI | for intrinsically safe application, Ex ia |
| S-25-A | 7.5 m, armoured, SS (25 foot) | | |

## Order Code

Example for order number

| Type | | Micro switch | | Code<br>Adjustment range | | Sensor length | | Options |
|---|---|---|---|---|---|---|---|---|
| MT1H | - | H | - | 251 | - | S-A | - | EXI |

Your order number

| | | | | | | | | |
|---|---|---|---|---|---|---|---|---|
| MT1H | - | | - | | - | | - | |



Subject to technical changes.